□□□□□□□□□□□□□□□□□□□□□□□□□□□□□□ Goochain□□□□□□□□□□□□□□□□□□□Microsoft Surface Pro□□□□□□□□□□□□□□□□□□□
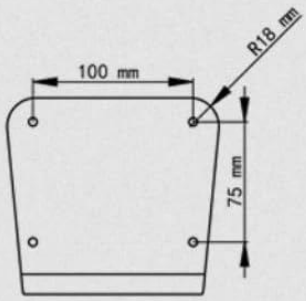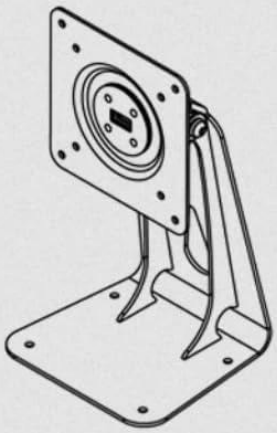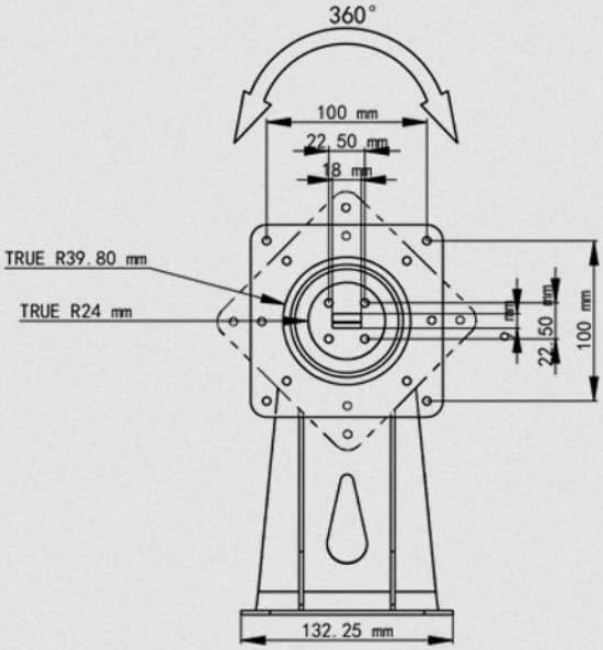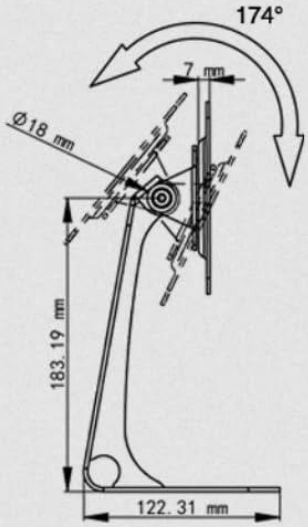
Specification