Goochain □□□Surface Pro □□□□
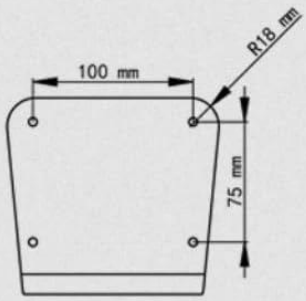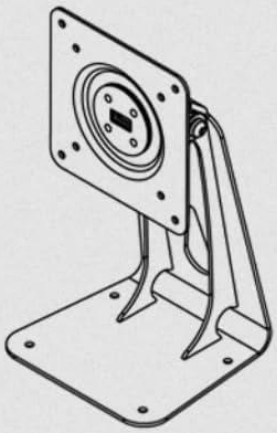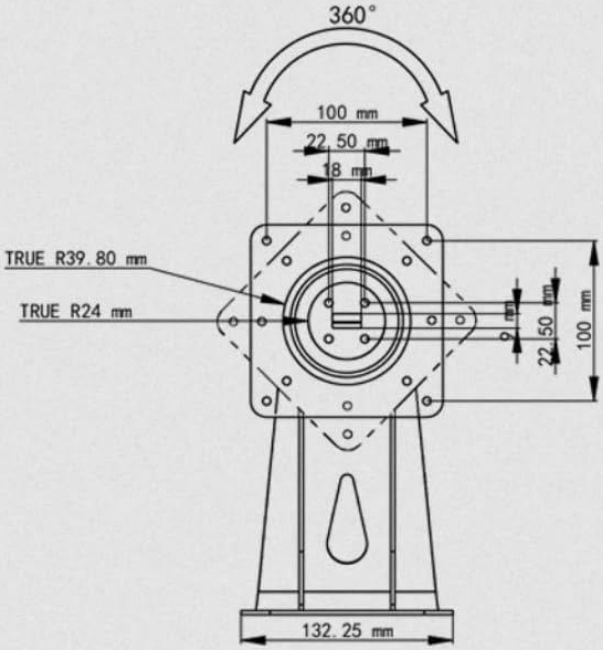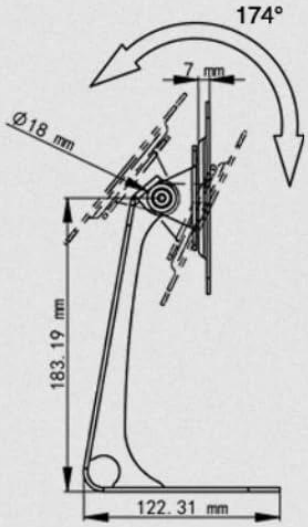
Specification